NOTES:
1. MOTOR SUPPLIED AS TWO SEPARATE COMPONENTS, ARMATURE & SENSOR ASSEMBLY AND FIELD ASSEMBLY
2. FOR A C.C.W. ROTATION AS VIEWED FROM LEAD END, ENERGIZE PER EXCITATION SEQUENCE TABLE
3. R = 1.5K OHMS APPROX. (CUSTOMER SUPPLIED)
4. V-AB, V-BC AND V-CA IS BACK EMF OF MOTOR PHASES AB, BC AND CA RESPECTIVELY, ALIGNED WITH SENSORS
5. MOUNTING SURFACE IS BETWEEN ∅3.570 [90.68] AND ∅3.700 [93.98] ON BOTH SIDES
6. SENSORS OPTIMIZED FOR BI-DIRECTIONAL ROTATION
7. DIMENSIONS IN BRACKETS [] ARE IN MILLIMETERS AND ARE REFERENCE ONLY
8. RoHS AND REACH COMPLIANCE REQUIRED IN ACCORDANCE WITH KOLLMORGEN PRODUCT ENVIRONMENTAL COMPLIANT SPECIFICATION, 960303, IN ITS LATEST REVISION

REVISION				
REV	ECN NO.	DESCRIPTION	DATE	APPROVED

MOTOR LEADS:
#16 AWG, TEFLON INSULATED, PER MIL-W-22759/11
3 LEADS, 15.75" [400] MIN
1-BLUE, 1-BROWN, 1-VIOLET

THERMISTOR LEADS:
KTY84/130 THERMISTOR
#26 AWG TEFLON COATED PER MIL-W-22759/11
2 LEADS, 15.75" [400] MIN LG. EACH,
1-YELLOW & 1-BLACK

SENSOR LEADS:
#28 AWG TEFLON COATED PER MIL-W-22759/11,
5 LEADS, 15.75" [400] MIN LG EACH
1-BLUE, 1-ORANGE, 1-BROWN, 1-GREEN, 1-YELLOW

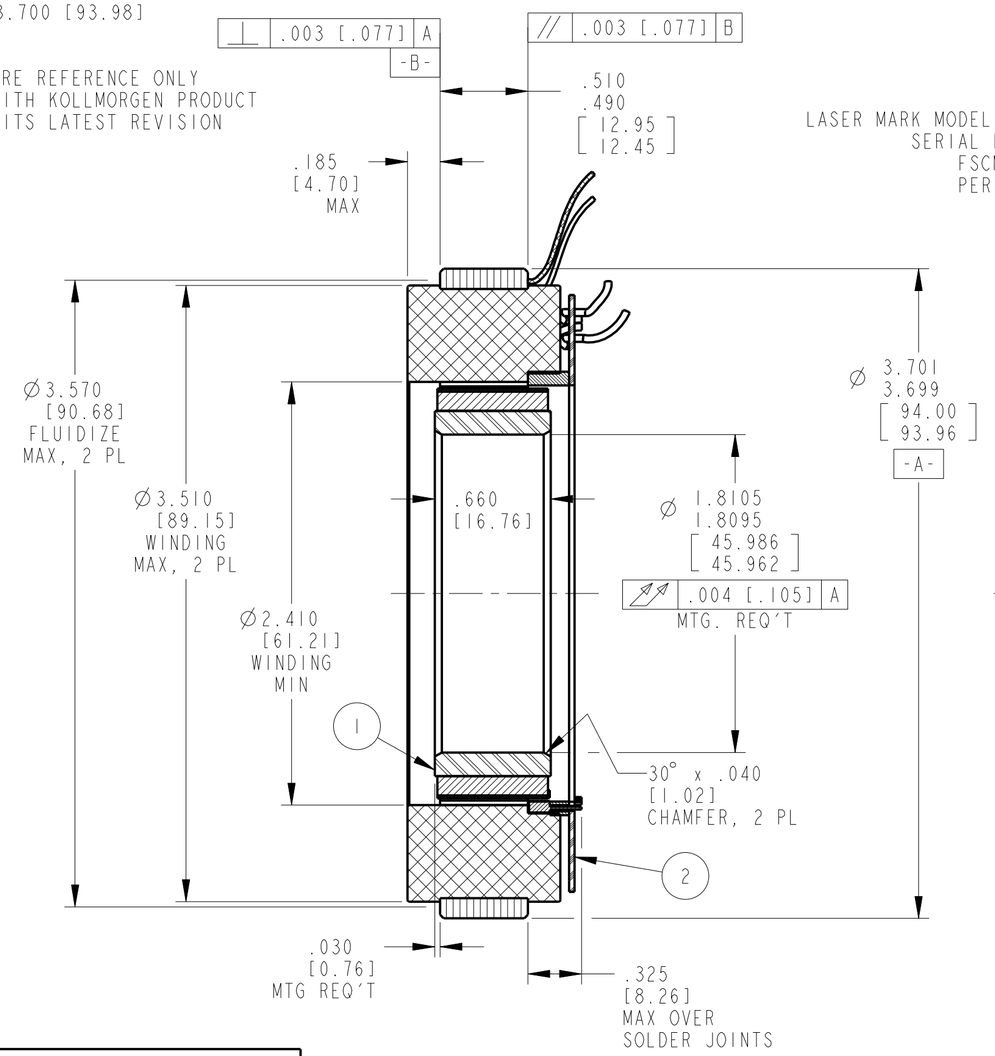

SECTION A-A

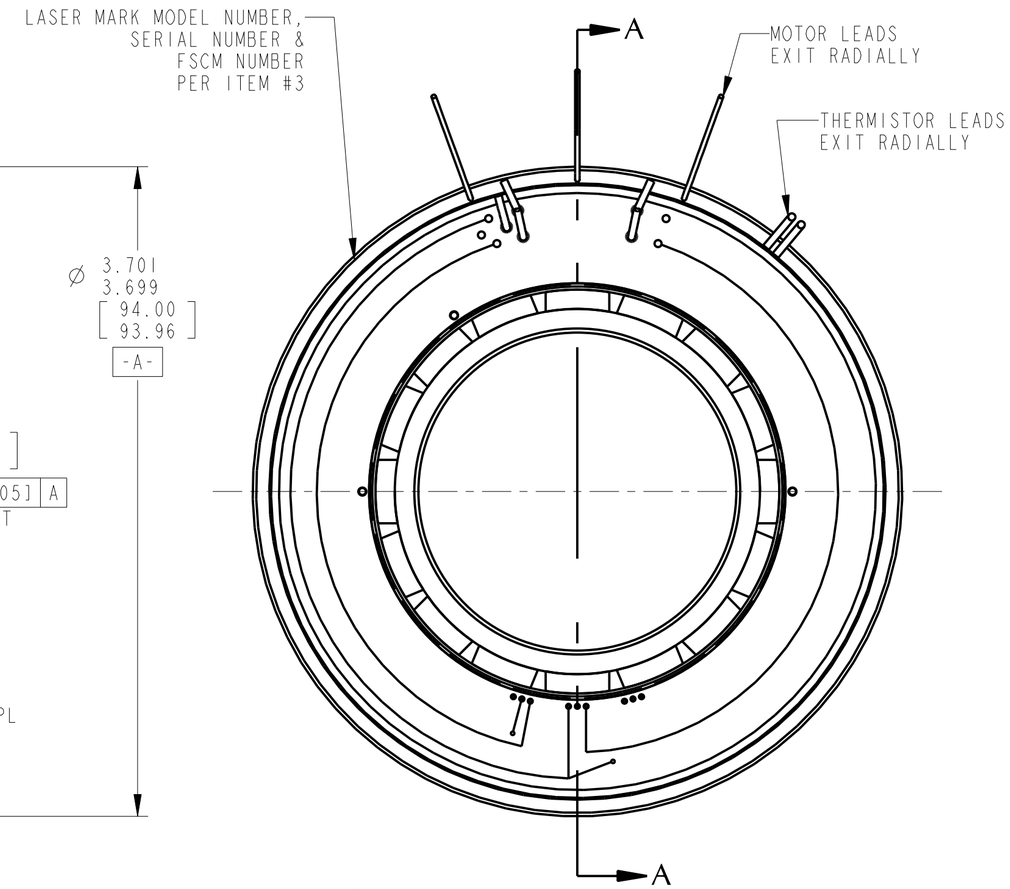

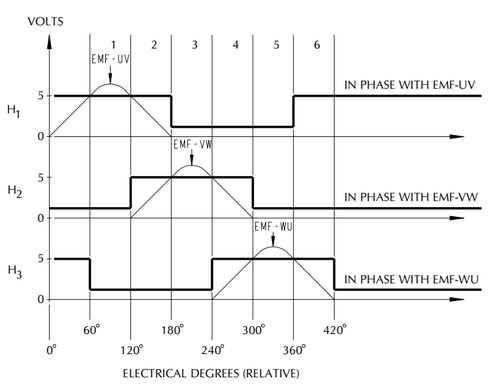

SENSOR OUTPUT
CCW VIEWED LEAD END

STEP	POWER CONNECTION PHASE "U" BLUE	PHASE "V" BROWN	PHASE "W" VIOLET
1	+	-	
2	+		-
3		+	-
4	-	+	
5	-		+
6		-	+

EXCITATION SEQUENCE TABLE

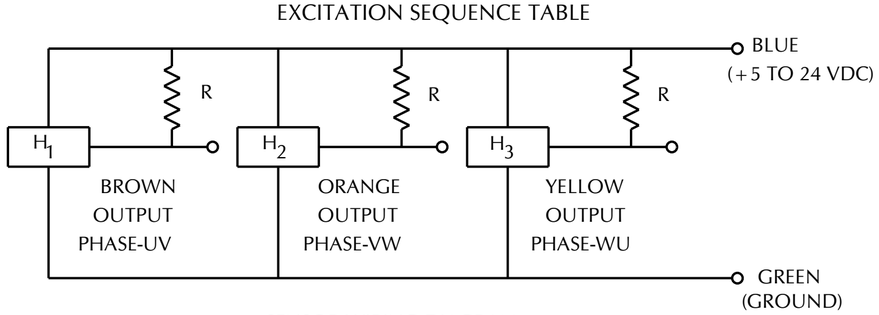

SENSOR WIRING DIAGRAM

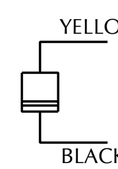

THERMISTOR CONNECTION

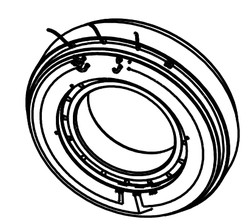

SCALE 1:2

ATTENTION
Static-Sensitive Devices
Handle Only at Static-Safe Workstations

THIRD ANGLE PROJECTION

▼ SIGNIFICANT PRODUCT CHARACTERISTIC
◆ CRITICAL PRODUCT CHARACTERISTIC

ITEM	QTY	IDENTIFYING NO.	DESCRIPTION
3	AR	IM-2709	MARKING PROCEDURE
2	1	969363	ARMATURE & SENSOR ASSEMBLY
1	1	969902	FIELD ASSEMBLY

LIST OF PARTS

UNLESS OTHERWISE SPECIFIED:
REMOVE ALL SHARP BURRS AND BREAK ALL SHARP EDGES
XX DECIMAL PLACES ±.015
XXX DECIMAL PLACES ±.005
ANGULAR DIMENSIONS ±1°

DO NOT SCALE DRAWING
USE DIMENSIONS ONLY
ALL DIMENSIONS ARE IN INCHES

INTERPRET GEOMETRIC SYMBOLS PER ANSI Y14.5M-1982

DRAWN BY: M.STONE DATE: 8-2-17
CHECKED BY:
APPROVED BY: A.Garlich

KOLLMORGEN
501 MAIN STREET
RADFORD, VIRGINIA 24141

OUTLINE
BMS-2304

FSCM	SIZE	DWG. NO.	REV
11384	C	969362	-

SCALE: 3:2 | JOB NO.: | SHEET 1 OF 1

THIS DOCUMENT IS ONLY FOR USE BY THE INTENDED RECIPIENT AND CONTAINS KOLLMORGEN CONFIDENTIAL INFORMATION

Pro/E Instance Name	ASSEMBLY_BMS2304_969362
Pro/E Drawing Name	969362
Pro/E Model Type	ASSEM

Pro/Engineer Drawing

REV. -
DWG. NO. 969362